FAIRBANKS® SCALES

FB2560 SERIES DAT

DRIVER ASSIST TERMINAL

A versatile Driver Assist Terminal that streamlines weighing processes and reduces operating costs.

Fairbanks.com

FB2560 SERIES DAT

DRIVER ASSIST TERMINAL

• Agriculture • Solid Waste • Aggregates • Recycling • Mining • Natural Resources

The FB2560 Series Driver Assist Terminal is designed to speed the vehicle weighing process and reduce associated operating costs. By allowing drivers to remain inside their vehicles, the FB2560 DAT also eliminates safety concerns and liabilities that can occur when drivers walk across scale platforms and traffic lanes.

The FB2560 DAT's reduction in weighment time increases scale throughput and overall efficiency. The FB2560 DAT also enables 24-hour operation without additional labor costs and has built-in ethernet connectivity that easily interfaces scale transaction data with a company's existing computer network.

Large, full-color graphic display with touch screen. Large text and simple to understand prompts allow drivers to process weighments with ease.

Function keys allow drivers to recall Product, Customer or Inbound weight information at the touch of a button.

Optional metalized vandal-resistant alpha keyboard for applications in which alpha data is required.

Optional printer enclosure with locking latch for added security.

Optional shroud provides additional protection and sun shield for the terminal.

Large numeric keys are easy to see and use, making weighments fast and easy to process.

Terminal enclosure latch can be locked for added security.

Optional intercom speaker allows driver to communicate with office when the need arises.

Optional proximity card reader, bar code card reader or magnetic card reader speeds up the process of vehicle identification. Simply swipe or present the card to begin the weighing transaction. Long range RFID readers also available.

Ticket dispenser

REDUCE OPERATING COSTS WITH THE FB2560 DRIVER ASSIST TERMINAL

NTEP and MC approved for use in commercial weighing applications.

FB2560 DAT WEIGHING PROCESS

1. Inbound-Outbound Screen

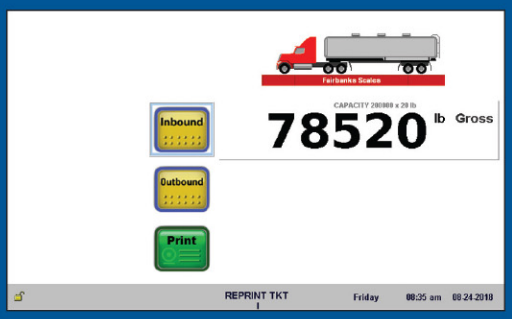

Truck pulls onto the scale platform and the process begins when the driver selects inbound or outbound weighing. In many applications, this screen can be bypassed so the process begins with the ID Entry Screen below.

2. ID Entry Screen

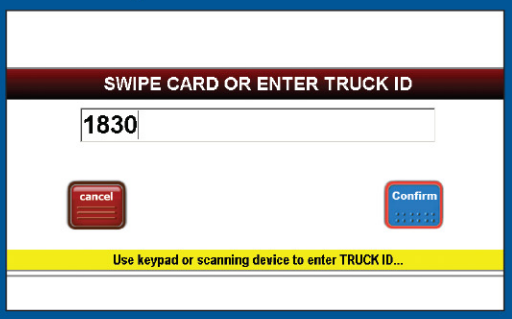

Driver is prompted to enter the Truck ID or swipe an ID card. FB2560 DAT reader accessories include a proximity, magnetic or bar code card reader.

3. Optional Customer ID Prompt

Optional prompt for Customer ID. Customer ID is validated against the system database.

4. Optional Product ID Prompt

Optional prompt for Product ID. Product ID is validated against the system database.

5. Optional Variable ID Prompt

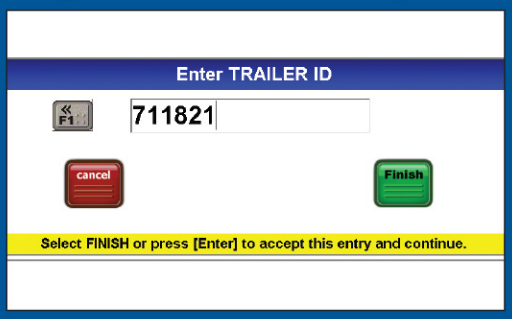

Customer specified information field. This information is stored in the transaction record, but not validated against the system database. Ten programmable fields are available.

6. Optional Review Screen

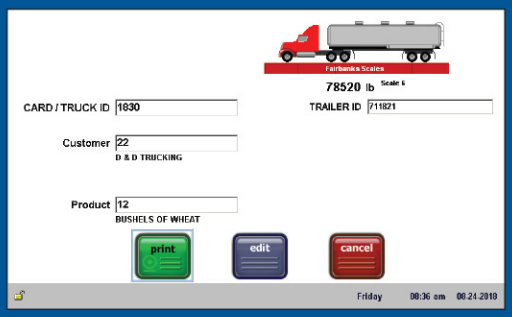

Provides the driver an opportunity to review the entered information before generating a ticket. If changes are needed, the driver can select the EDIT button to update the information.

7. Weight Processing Screen

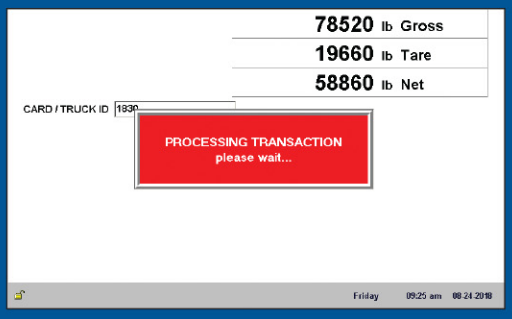

Screen will show Gross, Tare and Net weights briefly, while the transaction is processing. Printing a ticket is optional.

8. Process Conclusion Screen

Field programmable message that concludes the transaction. In this example, the message instructs the driver to take the ticket and exit the scale. Alternate messages are available for inbound and outbound transactions.

FB2560 SERIES DAT

DRIVER ASSIST TERMINAL

Weighing Solutions for the World Since 1830

Fairbanks.com

DIMENSIONS

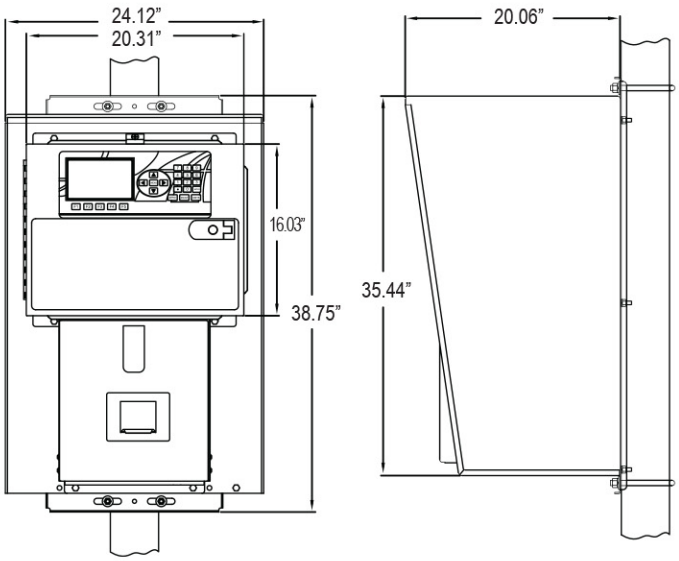

SPECIFICATIONS

Enclosure . . . . . Stainless steel NEMA 4X
Processor . . . . . Quad Core 1.83 GHz
Memory. . . . . 4 GB
Onboard storage . . . . . 8 GB Mini PCIe
Display . . . . . 6.0" x 3.5", 7.0" diagonal, 800 x 480 resolution,
TFT LCD with LED backlight,
Full color graphic with active matrix
Touch screen . . . . . Standard
Keypad . . . . . Oversized keys: 0-9, Decimal point, Enter,
5 Function keys, 8 Control keys
Outputs (internal) . . . . . One (1) RJ45 10/100/1000 Base-T Ethernet port
Three (3) RS232C ports:
One (1) RS232C/RS485 selectable
Two (2) dedicated RS232C
Five (5 USB ports:
Three (3) USB 2.0
One (1) USB 3.0
One (1) USB for remote QWERTY keyboard
One (1) dedicated optically isolated 20mA
Power requirements . . . . 100 to 240 VAC @ 47-63 Hz
Clock. . . . . Real time clock, Day of the week,
12-hour am/pm, Date (month/day/year)

Displayed characters . . . ⅜" tall
Display resolution . . . . . 10,000 divisions commercial,
50,000 divisions for non-commercial
Capacity . . . . . Programmable to 999,999
Displayed units . . . . . 5 primary and 5 secondary
Calibration &
configuration . . . . . Parameters can be configured locally at the instrument or remotely by means of an ethernet connection and standard browser
Programmable fields . . . 10
Product files 250,000
Customer files 250,000
Stored tares 500,000
Transaction records . . . . 1,000,000 (10,000 with two images)
Reports. . . . . Seven (7) onboard configurable reports
Networking . . . . . Network and share data between (up to five) model FB2560 DATs
Humidity . . . . . 0 to 99%
Accuracy. . . . . Class III/IIIL
Accessories . . . . . Integrated intercom speaker
Bar code card reader
Magnetic card reader
Proximity card reader
Metalized alpha keyboard
Remote displays
IP network camera
Traffic lights
Traffic light control box
Traffic light control card
Tape printer
Long-range RFID reader
4-20 mA (Passive,16 bit)
4-20 mA (Active,16 bit)
Serial expansion card with four additional outputs per card:
One (1) RS232C
One (1) RS232C/485 selectable
One (1) RS232/20mA selectable
One (1) RS485,
PLC interfaces:
PROFIBUS-DP, Modbus-RTU, Modbus-TCP, DeviceNet, ControlNet, Ethernet/IP
Approvals . . . . . NTEP CC# 10-089; MC# AM-5805, ETL

Your Fairbanks Scales Authorized Representative is:

Call toll-free for the representative nearest you:

(800) 451–4107

Call between 8:00 a.m. – 5:00 p.m. Central Time
Corporate Headquarters: 6800 W. 64th Street, Overland Park, Kansas 66202
(816) 471–0231 Internet Address: http://www.Fairbanks.com

Models and specifications subject to change without notice. © Fairbanks Scales Inc.