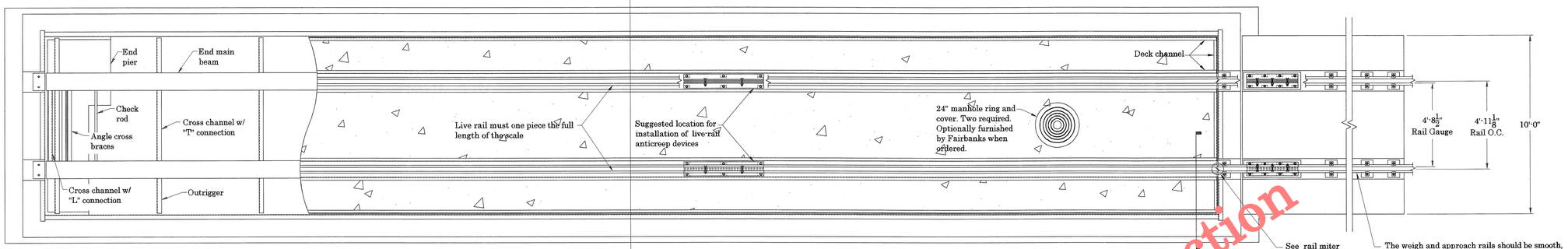

PLAN VIEW

See rail miter cut detail for recommended cut at joint

The weigh and approach rails should be smooth, straight, and without joints throughout their entire length. Surface and alignment must be preserved between the ends of the approach and weigh rails. The gap between the approach and the weigh rails shall be maintained to not less than 1/8" and shall not exceed 5/8". Positive means must be provided to protect the gap against change, such as expansion joints or other suitable means. A minimum of 75' of tangent track at each approach is required by AAR.

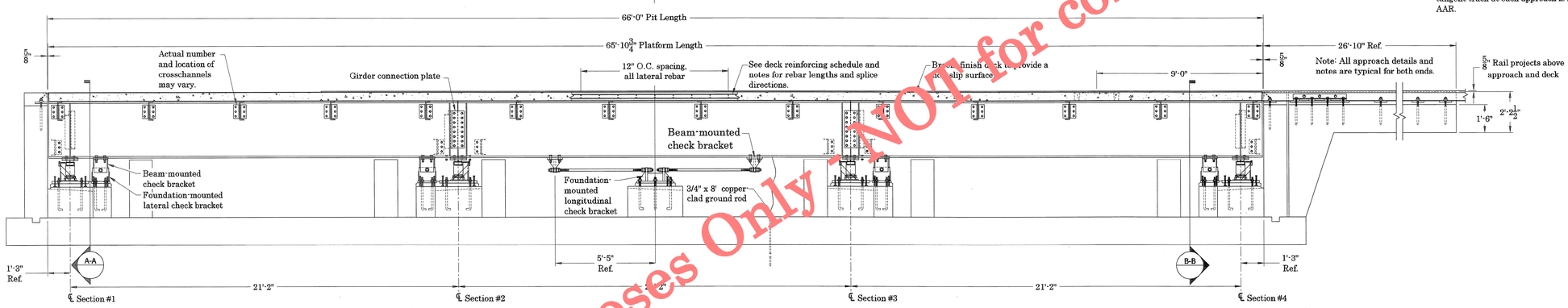

ELEVATION VIEW

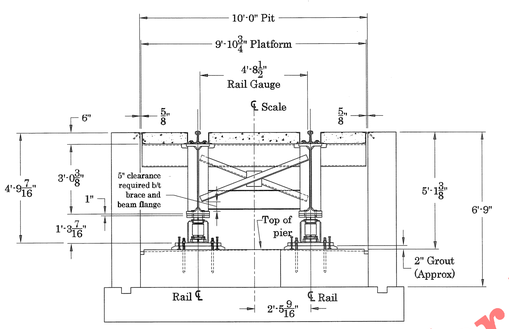

SECTION A-A

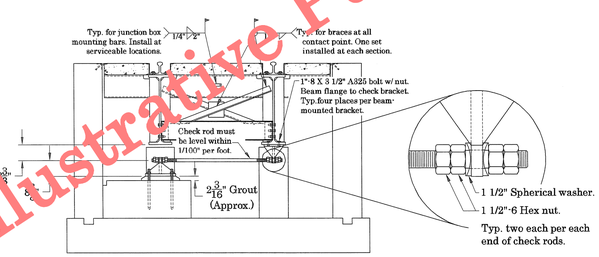

SECTION B-B

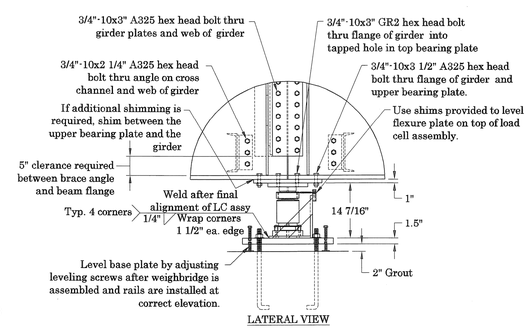

LATERAL VIEW

GENERAL NOTES

1. Verify pit dimensions before beginning scale installation. See foundation plan for pit dimensions.
2. If A.C. (alternating current) power is required in the pit, it shall not run closer than 24" in parallel to any load cell cable.
3. For grounding electrical hook-up, refer to manual 50584.
4. Material and workmanship for steel shall be in accordance with the latest issue of the AISC Specifications and codes of standard practice, ASTM designation A36, latest issue for steel.
5. All bolted connections (shop or field) shall consist of high-strength bolts conforming the latest ASTM specifications (A-325) and installed according to manufacturer's recommendations. Use the turn-of-the-nut method or torque figures given in Fairbanks manual 50538.
6. Finish: All structural steel shall have one shop prime coat. Immediately following the connecting of members, the heads, nuts, and washers of all permanent bolts, all field welds after removal of residual flux, all abrasions of the shop prime coat, and all field erection marks shall be thoroughly covered with one coat of primer.
7. To avoid damage to load cells during welding, it is recommended that the weighbridge be temporarily erected on blocks or dummy load cells.
8. Load cell base plates shall be level within 1/32" per foot. Load cell base plates shall not be grouted before the weighbridge is adjusted to final elevation.
9. The lateral and longitudinal check rods must be level within 0.010" per foot.
10. Set the base plate to the dimension shown and level using the leveling screws provided. Do not grout under the base plates until after weighbridge is set so that the base plate can be adjusted up or down to establish final scale elevations.
11. All grout shall be non-shrink type Sealtight 588 or equal. Grout is to be put in place and finished per the manufacturer's recommendations.
12. Load cell top bearing plates shall be level within 1/32". If shims are required, they must provide full suport between the bearing plate and the main beam.
13. Note: If welding is done in the pit after the installation has been completed with the load cells in place, all load cells must be disconnected and the leads prevented from grounding.
14. All load cell mounting hardware and check rod nuts are to be grease coated.
15. Reference - Installation and Maintenance handbook 50538.
16. Bituminous mastic is to be poured around rails and must be continuous from the approach slab to the approach slab ends, except at rail cuts to allow for movement.

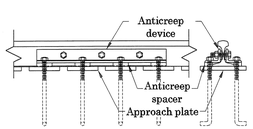

APPROACH ANTICREEP DETAIL

Anticreep devices are constructed of L4" x 3 1/2" x 1/2" angle. They are not furnished as part of the scale, but are available from Fairbanks as a supplementary accessory.

NOTE: This scale shown is manufactured to accept 115 lb A.R.E.A. rail, and all dimensions shown are represent design standards for 115 lb A.R.E.A. rail only. Rail to be provided by others.

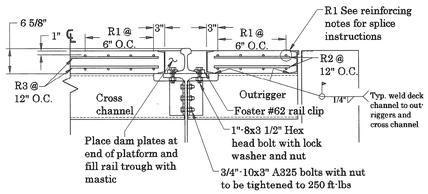

DECK REINFORCING DETAIL

DECK REINFORCING SCHEDULE ASTM 615 GRADE 60 REBAR				
MARK	QTY	SIZE	LENGTH	WEIGHT
R1	128	#4	18' - 0"	1539
R2	132	#4	1' - 6"	132
R3	66	#4	3' - 5"	151
			TOTAL	1822

DECK CONCRETE SCHEDULE 4000 PSI CONCRETE @ 28 DAYS	
Est.Concrete Required for Deck	9 cu. yds.

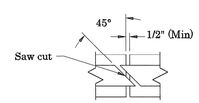

MITER CUT RAIL DETAIL

Typ. 4 places

WEIGH-RAIL MITER CUT DETAIL

at joint between scale and foundation

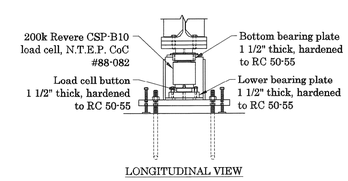

LONGITUDINAL VIEW

200k COMPRESSION LOAD CELL ASSEBMLY

N.T.E.P. CoC #88-082

LET	BY	DATE	REVISION

FAIRBANKS SCALES
MERIDIAN, MS
MADE IN THE USA SINCE 1830

Full Electronic Combination RRT/MTS
66'-0" x 10'-0" Setting Plan
180 tons per sect. 4 section
360 tons gross capacity

DATE 01/19/10 — AAR Scale Handbook Compliant

SCALE: N/A — SHEET 1 OF 1

DRAWN BY: JEM — MODEL: 12-1493

CHECKED BY: BM

APPROVED BY:

D145966-SP

THE MATERIAL AND INFORMATION CONTAINED HEREIN IS CONFIDENTIAL AND IS THE PROPERTY OF FAIRBANKS SCALES AND IS NOT TO BE USED, DISCLOSED, COPIED TRANSFERRED OR REPRODUCED WITHOUT THE PRIOR WRITTEN PERMISSION OF FAIRBANKS SCALES.

UNLESS OTHERWISE SPECIFIED: DIMENSIONS ARE IN INCHES TOLERANCES: FRACTIONS ±1/16" ANGLES 3-PLACE DECIMAL 2-PLACE DECIMAL HOLE DIAMETERS ±1/32"

MATERIAL N/A — FINISH N/A

For Illustrative Purposes Only - NOT for construction